SA SELECTORIZED SERIES

SA011 - LAT PULLDOWN

PRODUCT OVERVIEW

The professional-grade solution for lat pulldown training. The innovative dual-handle design effectively targets different back muscle regions. 4-position adjustable leg stabilization roller perfectly accommodates users of all body types. The precision weight system ensures optimal training resistance regardless of strength level.

SPECIFICATIONS & KEY FEATURES

Specifications

Dimension:	1375*1672*1913mm
Total Weight:	267kg
Weight Stack:	100kg
Max Weight Stack:	125kg

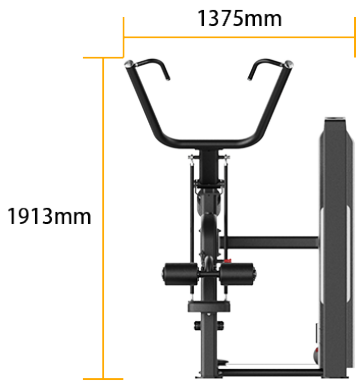

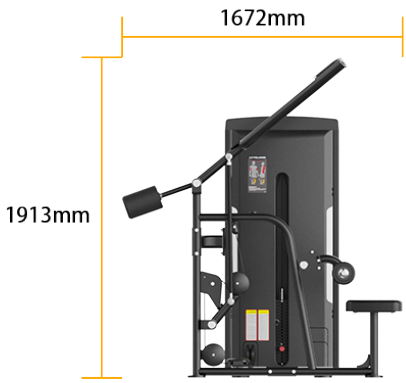

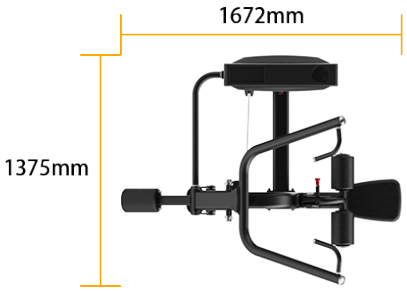

Product Features

Robust and Durable, Value-Optimized Choice

The main frame utilizes Q235A high-frequency cold-rolled steel, with 40*140mm square tubing and 50*100mm oval tubing working in harmony to ensure machine durability. Surface finishing employs electrostatic powder coating, passing over 800 hours of salt spray and impact testing. The finish is brilliantly aesthetic while the machine remains incredibly durable.

Dual-Handle Design, Comprehensive Back Training

The innovative dual-handle design enables comprehensive back training. Standard grip focuses on upper back development, while hammer grip emphasizes mid-lower back muscles. Handle surfaces feature special anti-slip material, ensuring stable grip throughout training for superior workout feel.

Stable Positioning for Precise Training

4-position leg stabilization roller adjustment perfectly accommodates users of all body types. Premium high-density padding provides comfortable, stable fixation, preventing discomfort during extended training sessions. When the body is stable, training becomes more effective.

Precision Weight Stack Engineering, Professional Training Assurance

Utilizing a high-density cast iron weight stack system with specialized black textured powder coating for premium feel. Special protective coating ensures wear and corrosion resistance, providing lasting durability for professional training. The weight distribution is precisely calibrated, with maximum weight reaching 125kg, allowing you to easily find that "perfect training weight" without compromising.