BS004

3 STACK MULTI-STATION

OWNER'S MANUAL

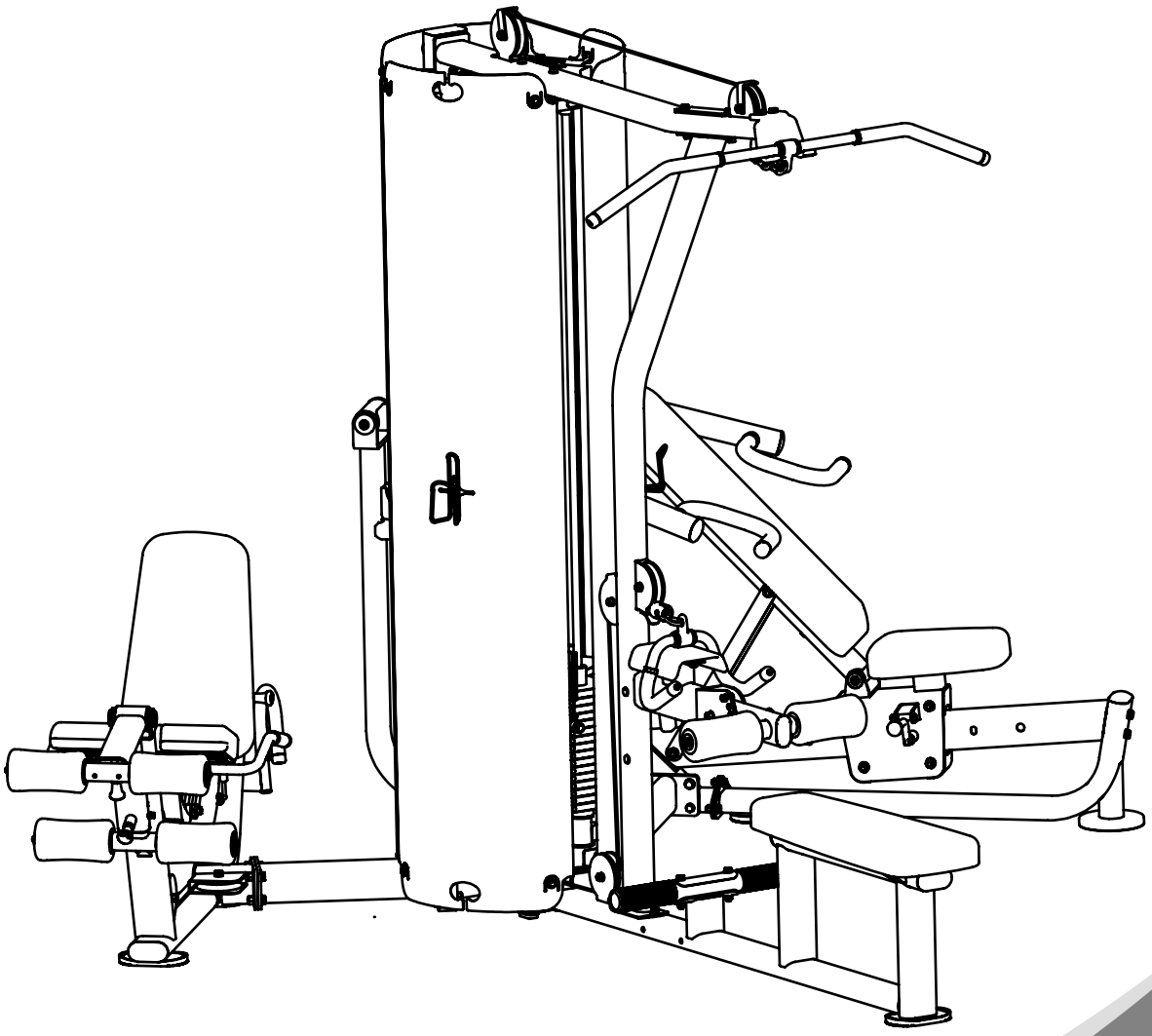

! CAUTION

Read all precautions
and instructions in this manual
before using this equipment

Important Safety Instructions

Before beginning any fitness program, you should obtain a complete physical examination from your physician. When using exercise equipment, basic precautions should always be taken, including the following:

* Read all instructions before using the equipment. These instructions are written to ensure your safety and to protect the unit.
* Do not allow children on or near the equipment.
* Use the equipment only for its intended purpose as described in this guide. Do not use accessory attachments that are not recommended by the manufacturer: such attachments might cause injuries.
* Wear proper exercise clothing and shoes for your workout----no loose clothing.
* Be careful when getting on or off the equipment.
* Do not overexert yourself or work to exhaustion.
* If you feel any pain or abnormal symptoms, stop your workout immediately and consult your physician.
* Never operate the unit when it has been dropped or damaged.
* Never drop or insert anything into any opening in the equipment.
* Always check the unit and its cables before each use. Make sure that all fasteners and cables are secure and in good working condition.
* Frayed or worn cables can be dangerous and may cause injury. Periodically check these cables for any indication of wear.
* Keep hands, limbs, loose clothing and long hair well out of the way of moving parts.
* Do not attempt to lift more weight than you can control safely.
* Do not use the equipment outdoors.

PERSONAL SAFETY DURING ASSEMBLY

* Read each step in the assembly instructions and follow the steps in sequence. Do not skip ahead. If you skip ahead, you may learn later that you have to disassemble components and that you may have damaged the equipment.
* Assemble and operate the equipment on a solid, level surface. Locate the unit a few feet from walls or furniture to provide easy access. The equipment is designed for your enjoyment. By following these precautions and using common sense, you will have many safe and pleasurable hours of healthful exercise with the equipment.

Exploded View and Parts List

ITEM NO.	DESCRIPTION	QTY	ITEM NO.	DESCRIPTION	QTY
1.1	Bottom Frame	1	1.41	Shaft Φ25.4*Φ12.5*72.5	1
1.2	Back Frame	1	1.42	Pop Pin	1
1.3	Seat Frame	1	1.43	Auxiliary tube	6
1.4	Front Frame	1	1.44	Guide Rod	6
1.5	Top Frame	1	1.45	Gear Hook	3
1.6	Small Top Frame 1	1	1.46	Selector Pin W/Coil	3
1.7	Small Top Frame 2	1	1.47	Cable Retainer	2
1.8	FOAM Frame 1	1	1.48	Aluminium Grip Ring	4
1.9	Handle Frame	1	1.49	Aluminium Grip Cap	4
1.10	Foot Frame	1	1.50	Cup Holder	2
1.11	Long Lat Bar	1	1.51	Copper bearing Φ38*Φ25.4*18	2
1.12	FOAM Frame 2	1	1.52	Button Head Cap Screw M12*100	1
1.13	Pulley Frame	1	1.53	Washer Φ13*Φ24*1.5	2
1.14	Row Handle	1	1.54	Nylon lock Nut M12	1
1.15	Weight Stack Base	6	1.55	Hex Head bolt M10*75	4
1.16	Support Hook	1	1.56	Button Head Cap Screw M10*30	2
1.17	Iron shroud	3	1.57	Hex Head bolt M10*50	13
1.18	Fixed Plate	6	1.58	Hex Head bolt M10*25	16
1.19	Cable 1	1	1.59	Hex Head bolt M10*70	12
1.20	Cable 2	1	1.61	Hex Head bolt M10*30	2
1.21	Back Pad	1	1.62	Washer Φ11*Φ38*2	2
1.22	Short Rollor	2	1.63	Washer Φ20*Φ11*2	80
1.23	Nylon Spacer	4	1.64	Spring Washer Φ10	15
1.24	Foot Cover	2	1.65	Flat head six angle rivet nut M10*19.5	12
1.25	Rubber Sleeve	2	1.66	Nylon lock Nut M10	28
1.26	Plug RT40*80	2	1.67	Socket Head Cap Screw M8*70	6
1.27	Plug □50*100	1	1.68	Socket Head Cap Screw M8*20	2
1.28	Stop Spacer	2	1.69	Hex Head bolt M8*15	12
1.29	Mout Sleeve	6	1.70	Washer Φ9*Φ22*1.6	12
1.30	Weight Rubber Bumper	6	1.71	Washer Φ9*Φ16*1.6	8
1.31	4.5″ Pulley	10	1.72	Spring Washer Φ8	18
1.32	Plug RT50*100	2	1.73	Nylon lock Nut M8	2
1.33	Bumper	6	1.74	Flat Head Cap Screw M6*16	4
1.34	Plug □50	14	1.75	Button Head Cap Screw M5*12	4
1.35	3.5″ Pulley	3	1.76	Socket Set Screw M5*3	8
1.36	Grip Φ30*Φ22*415	2	1.77	Nylon lock Nut M5	4
1.37	Grip ST Φ30*Φ22*240	2	1.78	Hex Head bolt M10*15	2
1.38	Rubber Bumper	6	1.79	Socket Set Screw M8*10	2
1.39	Chain	1	1.80	Single link chain	1
1.40	Scaleboard	1			

WEIGHTS	ITEM NO.	DESCRIPTION	QTY
80KG/176LBS	1.2	Weight Plate 272*135*19	15
100KG/176LBS	1.2	Weight Plate 272*135*19	19

Exploded View and Parts List

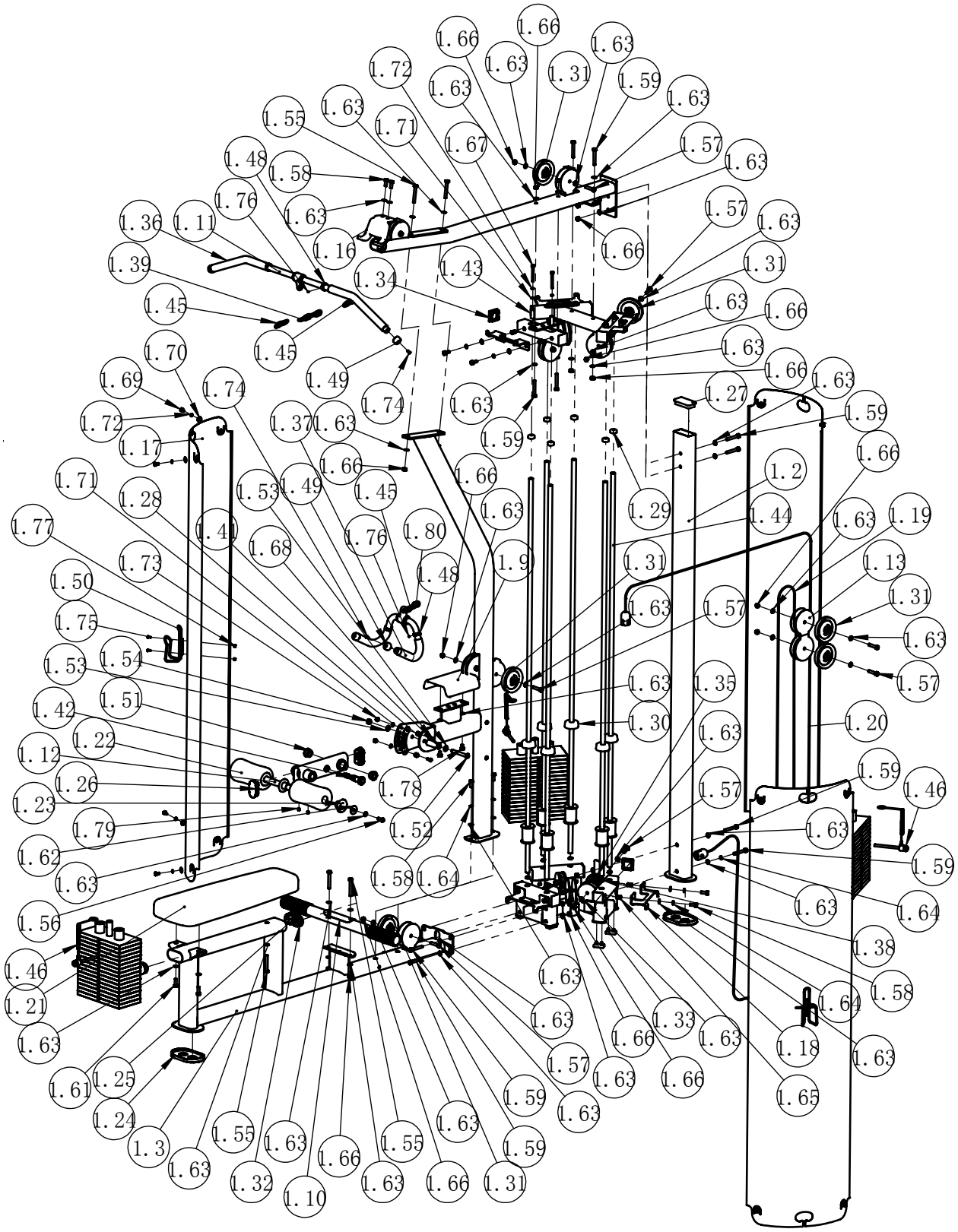

Assembly

STEP 1

ITEM NO.	DESCRIPTION	QTY	ITEM NO.	DESCRIPTION	QTY
1.1	Bottom Frame	1	1.58	Hex Head bolt M10*25	2
1.2	Back Frame	1	1.59	Hex Head bolt M10*70	10
1.3	Seat Frame	1	1.63	Washer Φ20*Φ11*2	25
1.4	Front Frame	1	1.64	Spring Washer ϕ10	3
1.5	Top Frame	1	1.66	Nylon lock Nut M10	11
1.44	Guide Rod	6	1.67	Socket Head Cap Screw M8*70	6
1.46	Selector Pin W/Coil	3	1.71	Washer Φ9*Φ16*1.6	6
1.55	Hex Head bolt M10*75	2	1.72	Spring Washer ϕ8	6

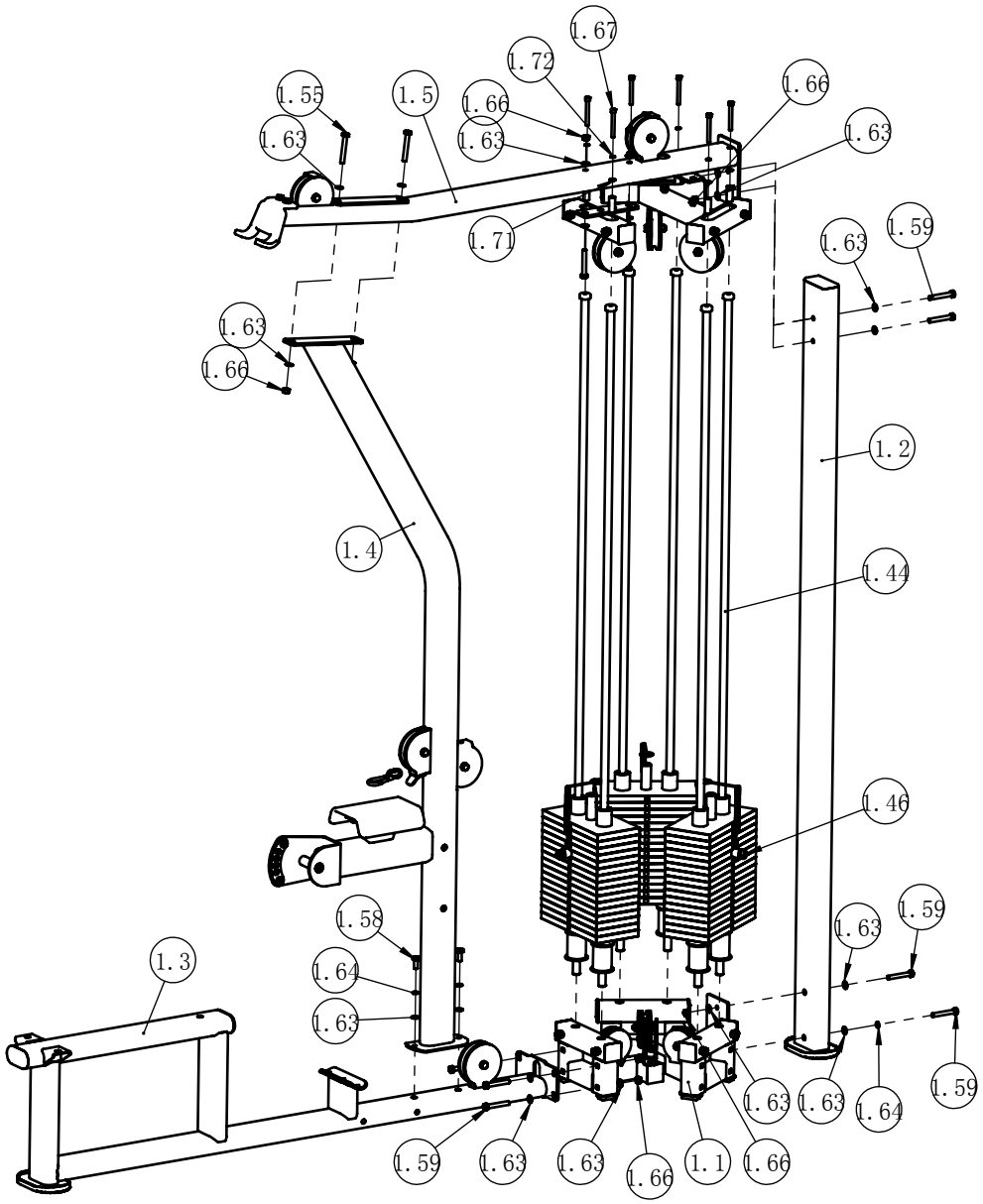

STEP 2

ITEM NO.	DESCRIPTION	QTY	ITEM NO.	DESCRIPTION	QTY
1.8	FOAM Frame 1	1	1.55	Hex Head bolt M10*75	2
1.10	Foot Frame	1	1.58	Hex Head bolt M10*25	12
1.18	Fixed Plate	6	1.63	Washer Φ20*Φ11*2	16
1.52	Button Head Cap Screw M12*100	1	1.64	Spring Washer Φ10	12
1.53	Washer Φ13*Φ24*1.5	2	1.65	Flathead six angle rivet nut M10*195	12
1.54	Nylon lock Nut M12	1	1.66	Nylon lock Nut M10	2

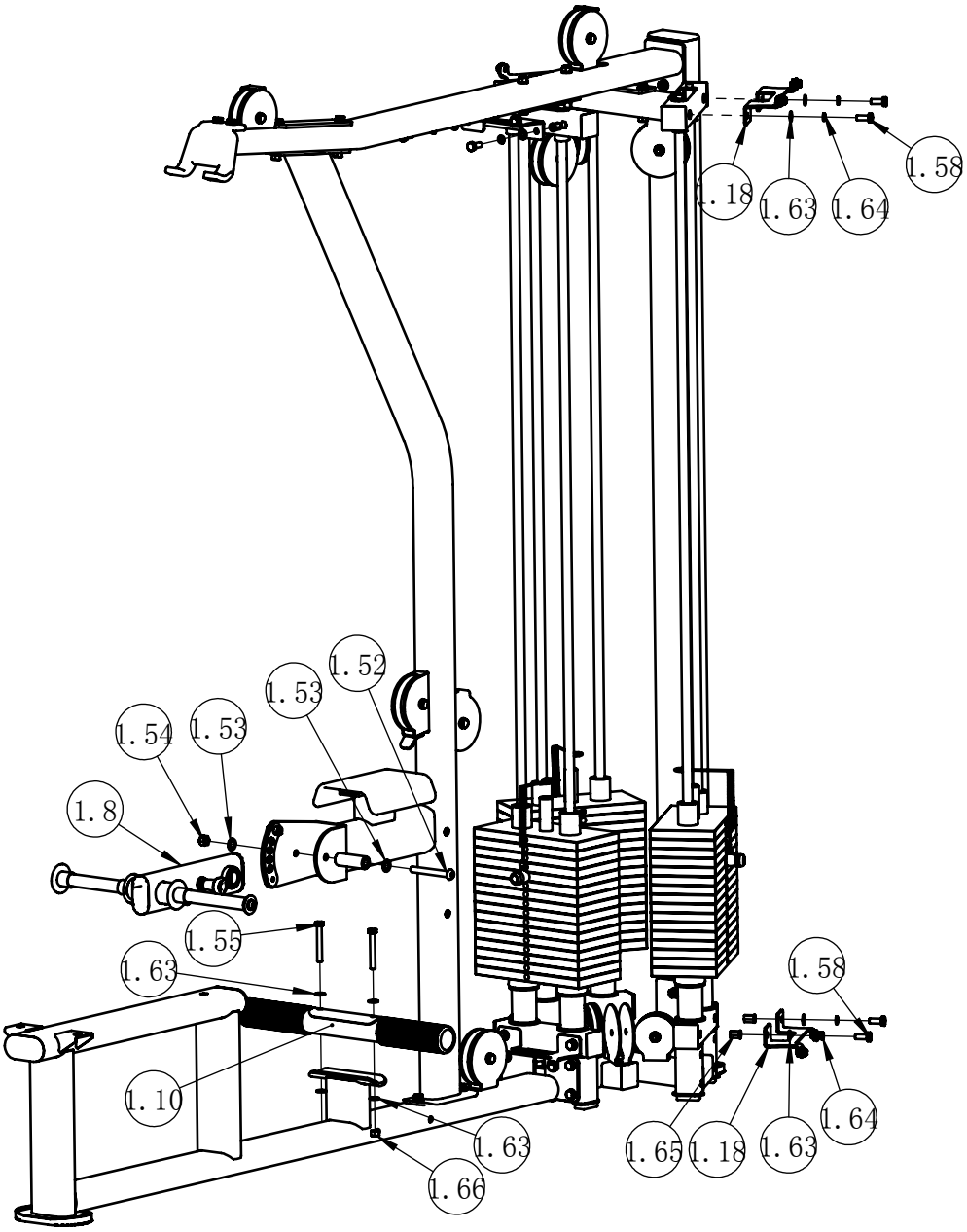

STEP 3

ITEM NO.	DESCRIPTION	QTY	ITEM NO.	DESCRIPTION	QTY
1.11	Long Lat Bar	1	1.20	Cable 2	1
1.13	Pulley Frame	1	1.31	4.5″ Pulley	5
1.14	Row Handle	1	1.35	3.5″ Pulley	1
1.19	Cable 1	1	1.39	Chain	1

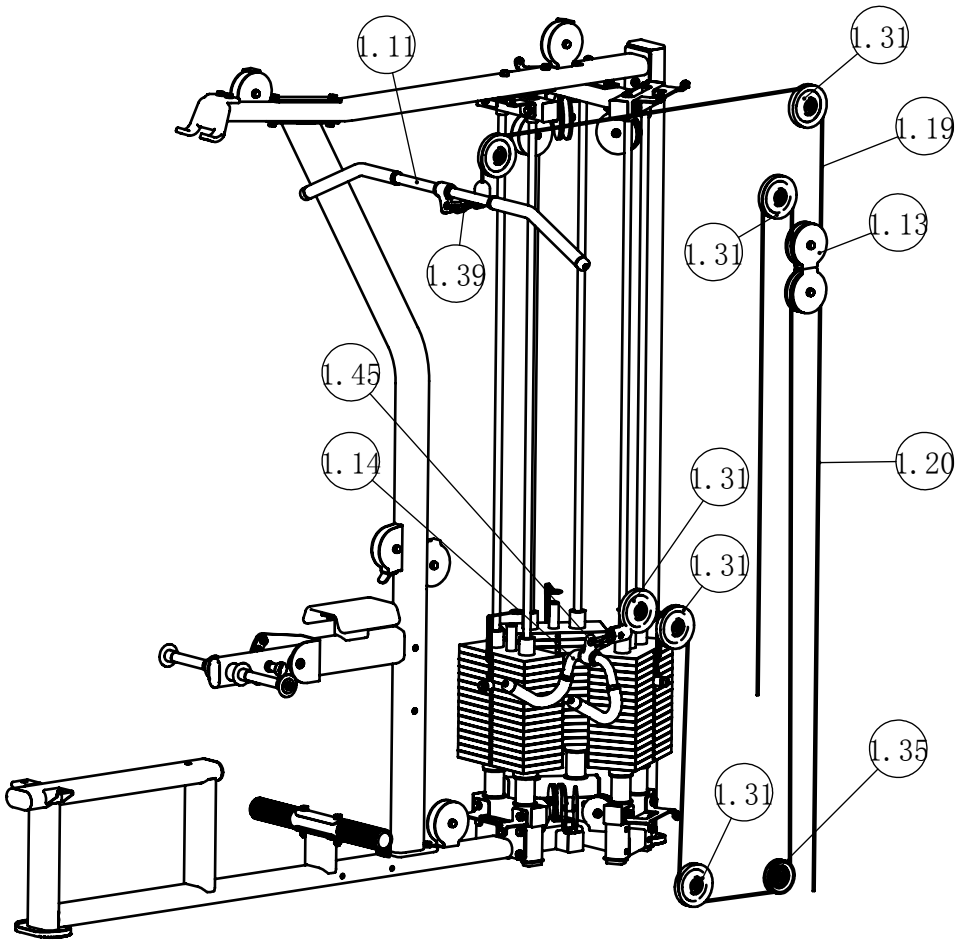

STEP 4

ITEM NO.	DESCRIPTION	QTY	ITEM NO.	DESCRIPTION	QTY
1.21	Back Pad	1	1.56	Button Head Cap Screw M10*30	2
1.22	Short Rollor	2	1.61	Hex Head bolt M10*30	2
1.23	Nylon Spacer	4	1.62	Washer Φ11*Φ38*2	2
1.55	Hex Head bolt M10*75	1	1.63	Washer Φ20*Φ11*2	5

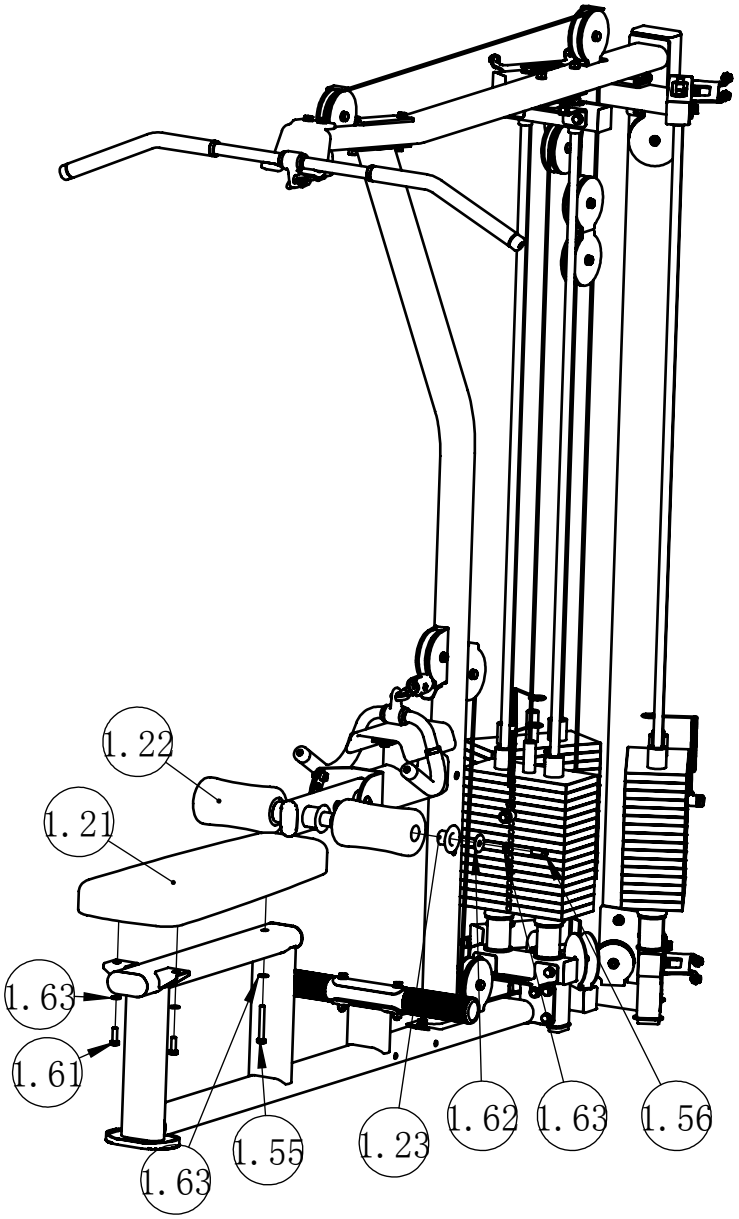

Exploded View and Parts List

ITEM NO.	DESCRIPTION	QTY	ITEM NO.	DESCRIPTION	QTY
2.1	Main Frame	1	2.32	Bumper	4
2.2	Connect Frame	1	2.33	Plug Φ25.4	2
2.3	Front Handle Frame	1	2.34	Adjusting Screw	1
2.4	Rear Handle Frame	1	2.35	Aluminium Grip Ring	4
2.5	Seat Pad Frame	1	2.36	Aluminium Grip Cap	4
2.6	Back Pad Frame	1	2.37	Bushing	4
2.7	Swing Frame	1	2.38	Bushing Φ14*Φ10*20	1
2.8	Rollor Frame	2	2.39	Beaing 6005-2Z	2
2.9	Rollor Tube	2	2.40	Hex Head bolt M12*35	4
2.10	Shaft Φ25*100	1	2.41	Washer Φ13*Φ24*1.5	8
2.11	Wheel	1	2.42	Nylon lock Nut M12	4
2.12	Wheel Spacer	2	2.43	Flat Head Cap Screw M10*25	6
2.13	Plastic Tube Guide	2	2.44	Button Head Cap Screw M10*75	1
2.14	Seat Pad	1	2.45	Button Head Cap Screw M10*30	4
2.15	Cable 3	1	2.46	Hex Head bolt M10*125	2
2.16	Gas Spring	1	2.47	Hex Head bolt M10*115	2
2.17	Pop Pin 2	2	2.48	Hex Head bolt M10*70	6
2.18	Pop Pin 3	1	2.49	Hex Head bolt M10*50	3
2.19	Shaft Φ25.4*127	2	2.50	Hex Head bolt M10*45	1
2.20	End Cap Φ38*6	6	2.51	Hex Head bolt M10*30	6
2.21	Cable End	1	2.52	Hex Head bolt M10*25	1
2.22	Back Pad	1	2.53	Spring Washer Φ10	2
2.23	Short Rollor	4	2.54	Washer Φ20*Φ11*2	33
2.24	Grip Φ30*Φ22*415	2	2.55	Washer Φ11*Φ38*2	4
2.25	4.5″ Pulley	4	2.56	Arc washers Φ10.5*Φ21*1.8	4
2.26	Plug RT50*100	4	2.57	Nylon lock Nut M10	13
2.27	Bumper	1	2.58	Six angle flange nut M10	1
2.28	Foot Cover	2	2.59	Socket Head Cap Screw M8*20	2
2.29	Bumper Φ45*Φ12.7*16.5	2	2.60	Flat Head Cap Screw M6*16	4
2.30	Grip ST Φ30*Φ22*130	2	2.61	Socket Set Screw M5*3	8
2.31	Nylon Spacer	8	2.62	Socket Set Screw M8*10	4

Exploded View and Parts List

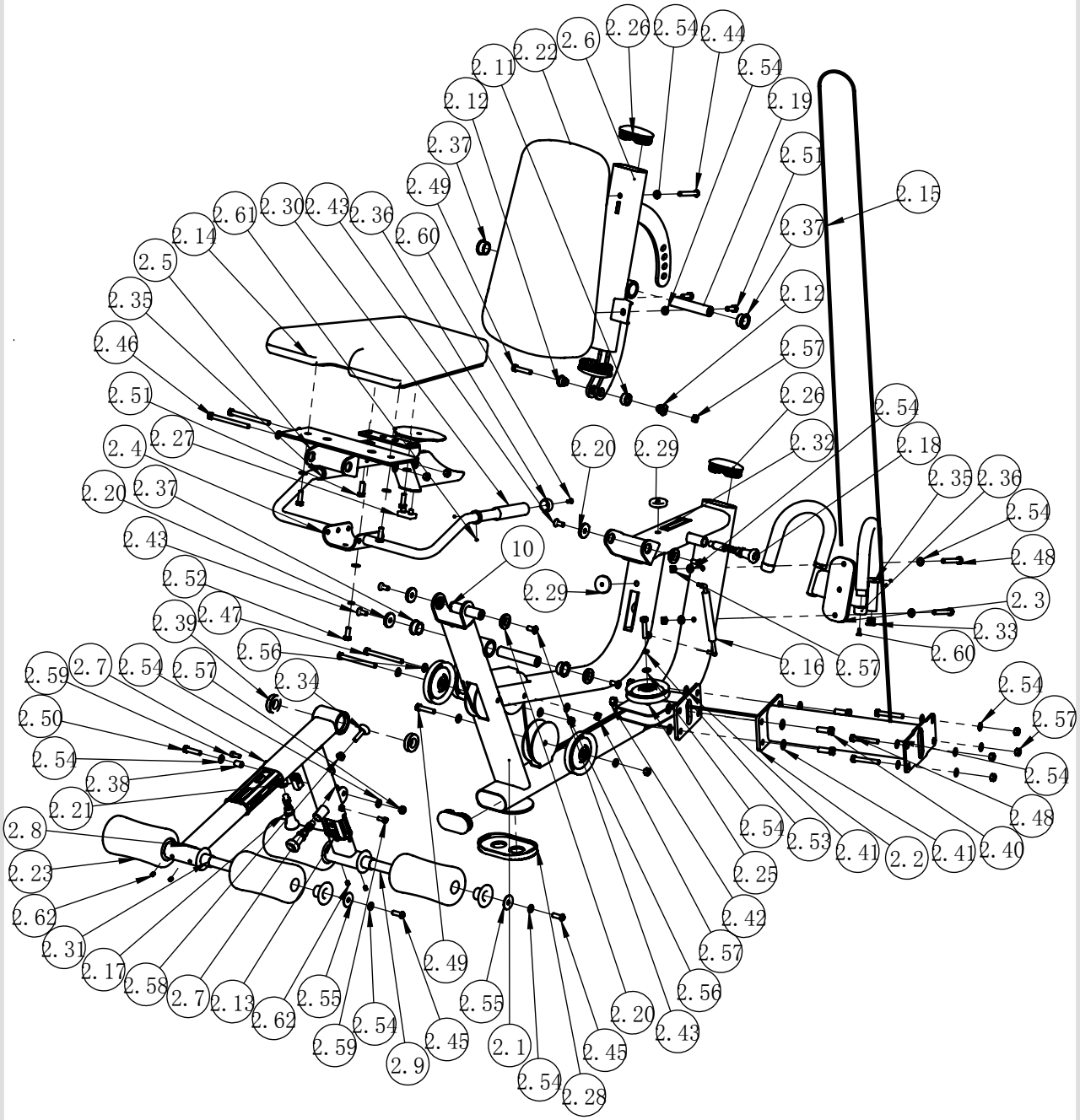

STEP 1

ITEM NO.	DESCRIPTION	QTY	ITEM NO.	DESCRIPTION	QTY
2.1	Main Frame	1	2.40	Hex Head bolt M12*35	4
2.3	Front Handle Frame	1	2.41	Washer Φ13*Φ24*1.5	8
2.5	Seat Pad Frame	1	2.42	Nylon lock Nut M12	4
2.6	Back Pad Frame	1	2.43	Flat Head Cap Screw M10*25	4
2.15	Cable 3	1	2.48	Hex Head bolt M10*70	6
2.19	Shaft Φ25.4*127	2	2.54	Washer Φ20*Φ11*2	12
2.20	End Cap Φ38*6	4	2.57	Nylon lock Nut M10	6
2.37	Bushing	4			

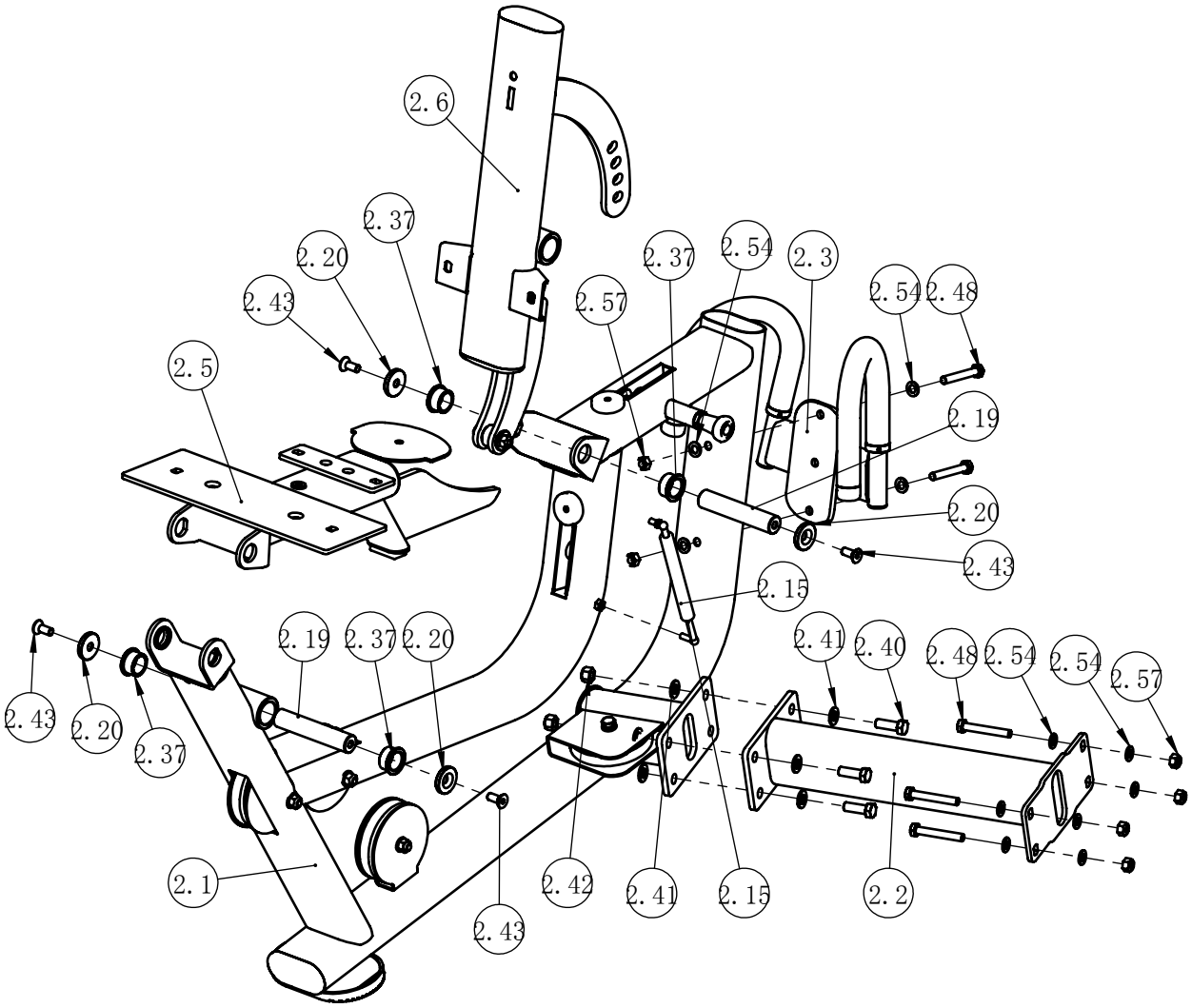

STEP 2

ITEM NO.	DESCRIPTION	QTY	ITEM NO.	DESCRIPTION	QTY
2.4	Rear Handle Frame	1	2.46	Hex Head bolt M10*125	2
2.7	Swing Frame	1	2.52	Hex Head bolt M10*25	1
2.9	Rollor Tube	2	2.53	Spring Washer Φ10	1
2.10	Shaft Φ25*100	1	2.54	Washer Φ20*Φ11*2	5
2.20	End Cap Φ38*6	2	2.57	Nylon lock Nut M10	2
2.43	Flat Head Cap Screw M10*25	2	2.62	Socket Set Screw M8*10	2

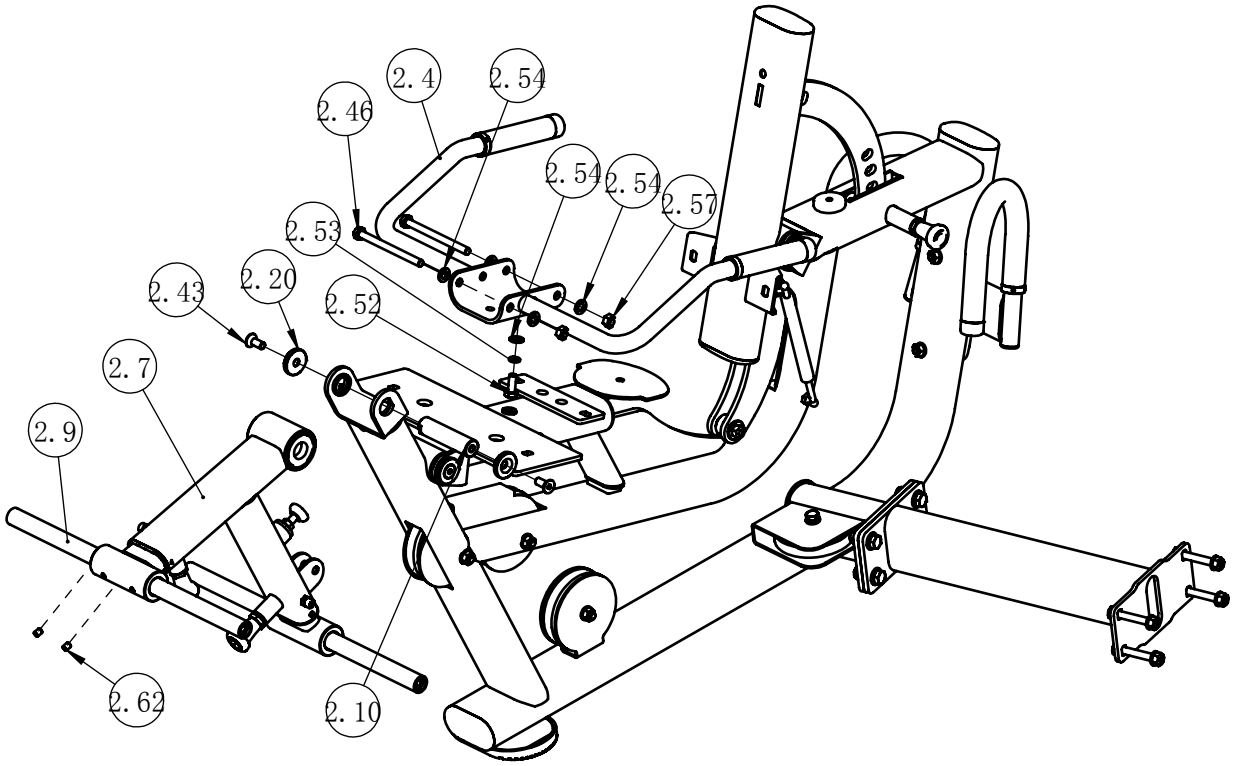

STEP 3

ITEM NO.	DESCRIPTION	QTY	ITEM NO.	DESCRIPTION	QTY
2.14	Seat Pad	1	2.44	Button Head Cap Screw M10*75	1
2.15	Cable 3	1	2.45	Button Head Cap Screw M10*30	4
2.21	Cable End	1	2.50	Hex Head bolt M10*45	1
2.22	Back Pad	1	2.51	Hex Head bolt M10*30	6
2.23	Short Rollor	4	2.54	Washer Φ20*Φ11*2	13
2.31	Nylon Spacer	8	2.55	Washer Φ11*Φ38*2	4
2.38	Bushing Φ14*Φ10*20	1	2.57	Nylon lock Nut M10	1

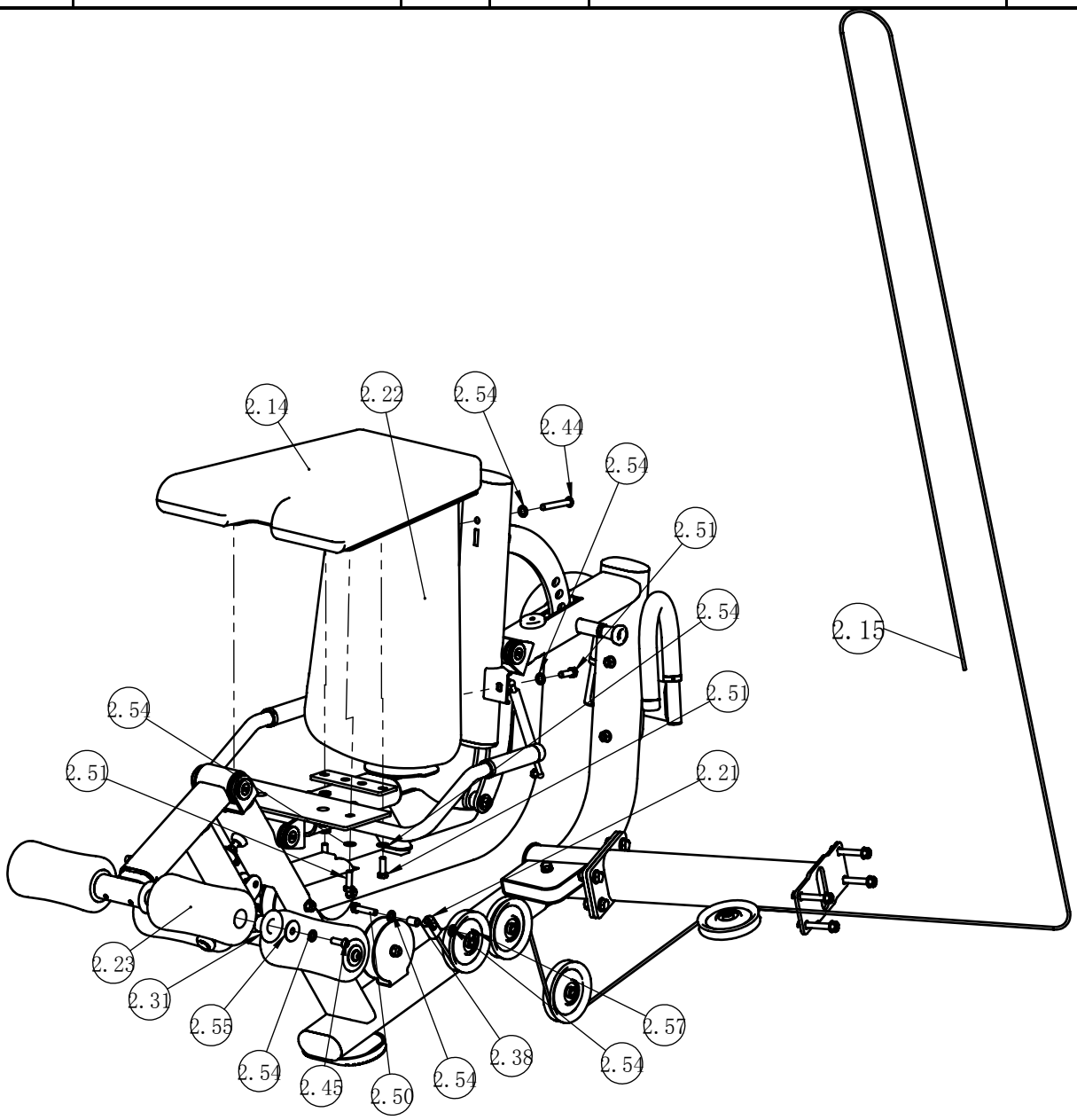

Exploded View and Parts List

ITEM NO.	DESCRIPTION	QTY	ITEM NO.	DESCRIPTION	QTY
3.1	Bottom Frame	1	3.34	Adjustable Handball	1
3.2	Main Frame	1	3.35	Aluminium Grip Ring Φ32	2
3.3	Front Bottom Frme	1	3.36	Aluminium Grip Cap Φ32	2
3.4	Slip Frame	1	3.37	End Cap Φ50*8	2
3.5	Swing Frame	1	3.38	1″ Flange Bearing	2
3.6	Arm Frame	1	3.39	Bushing Φ38*Φ25.4*18	4
3.7	Seat Pad Frame	1	3.40	Bushing Φ16*Φ8*8	2
3.8	Back Pad Frame	1	3.41	Bushing Φ25*Φ12.2*13	4
3.9	Back Pad Support Frame	1	3.42	Bushing Φ14*Φ10*20	1
3.10	Adjustable Handle	1	3.43	Socket Head Cap Screw M12*150	2
3.11	Pop Pin 4	1	3.44	Socket Head Cap Screw M12*105	2
3.12	Cable 4	1	3.45	Washer Φ13*Φ24*1.5	14
3.13	Shaft Φ25.4*165	1	3.46	Nylon lock Nut M12	8
3.14	Pop Pin 5	1	3.47	Hex Head bolt M12*30	2
3.15	Shaft Φ25.4*127	1	3.48	Flat Head Cap Screw M10*25	6
3.16	Chain Link	1	3.49	Socket Head Cap Screw M10*105	1
3.17	End Cap Φ38*6	4	3.50	Socket Head Cap Screw M10*70	2
3.18	Fixed Block	2	3.51	Hex Head bolt M10*75	4
3.19	Cable End	1	3.52	Hex Head bolt M10*50	5
3.20	Back Pad	1	3.53	Hex Head bolt M10*45	1
3.21	Seat Pad	1	3.54	Hex Head bolt M10*30	5
3.22	Scaleboard	1	3.55	Hex Head bolt M10*25	2
3.23	Shaft Φ25.4*162	1	3.56	Hex Head bolt M10*140	2
3.24	Grip STΦ36*Φ28*500	2	3.58	Hex Head bolt M10*70	4
3.25	Stopper Bumper	2	3.59	Washer Φ20*Φ11*2	42
3.26	4.5″ Pulley	4	3.60	Spring Washer Φ10	4
3.27	Plug RT50*100	2	3.61	Nylon lock Nut M10	16
3.28	Spacer	4	3.62	Button Head Cap Screw M8*60	1
3.29	Bumper Φ45*Φ12.7*16.5	2	3.63	Socket Head Cap Screw M8*25	2
3.30	Wheel Assy	4	3.64	Washer Φ9*Φ16*1.6	4
3.31	Adjustable Foot Plate	1	3.65	Nylon lock Nut M8	3
3.32	Foot Cover	2	3.66	Socket Set Screw M5*3	8
3.33	Plug Φ60	2			

Exploded View and Parts List

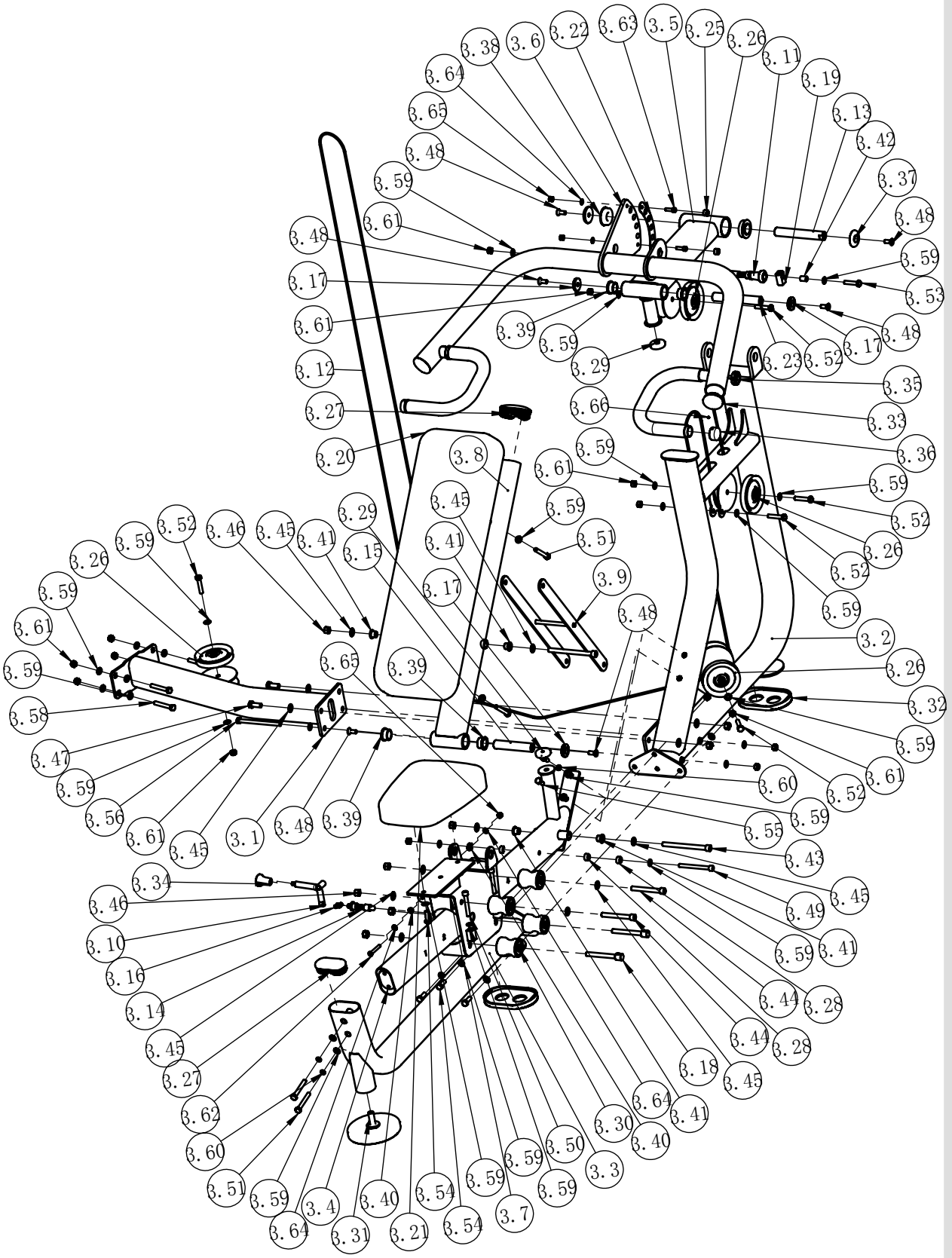

STEP 1

ITEM NO.	DESCRIPTION	QTY	ITEM NO.	DESCRIPTION	QTY
3.1	Bottom Frame	1	3.47	Hex Head bolt M12*30	2
3.2	Main Frame	1	3.48	Flat Head Cap Screw M10*25	2
3.3	Front Bottom Frme	1	3.51	Hex Head bolt M10*75	2
3.4	Slip Frame	1	3.54	Hex Head bolt M10*30	3
3.6	Arm Frame	1	3.56	Hex Head bolt M10*140	2
3.13	Shaft Φ25.4*165	1	3.58	Hex Head bolt M10*70	4
3.37	End Cap Φ50*8	2	3.59	Washer Φ20*Φ11*2	20
3.45	Washer Φ13*Φ24*1.5	4	3.60	Spring Washer Φ10	2
3.46	Nylon lock Nut M12	2	3.61	Nylon lock Nut M10	9

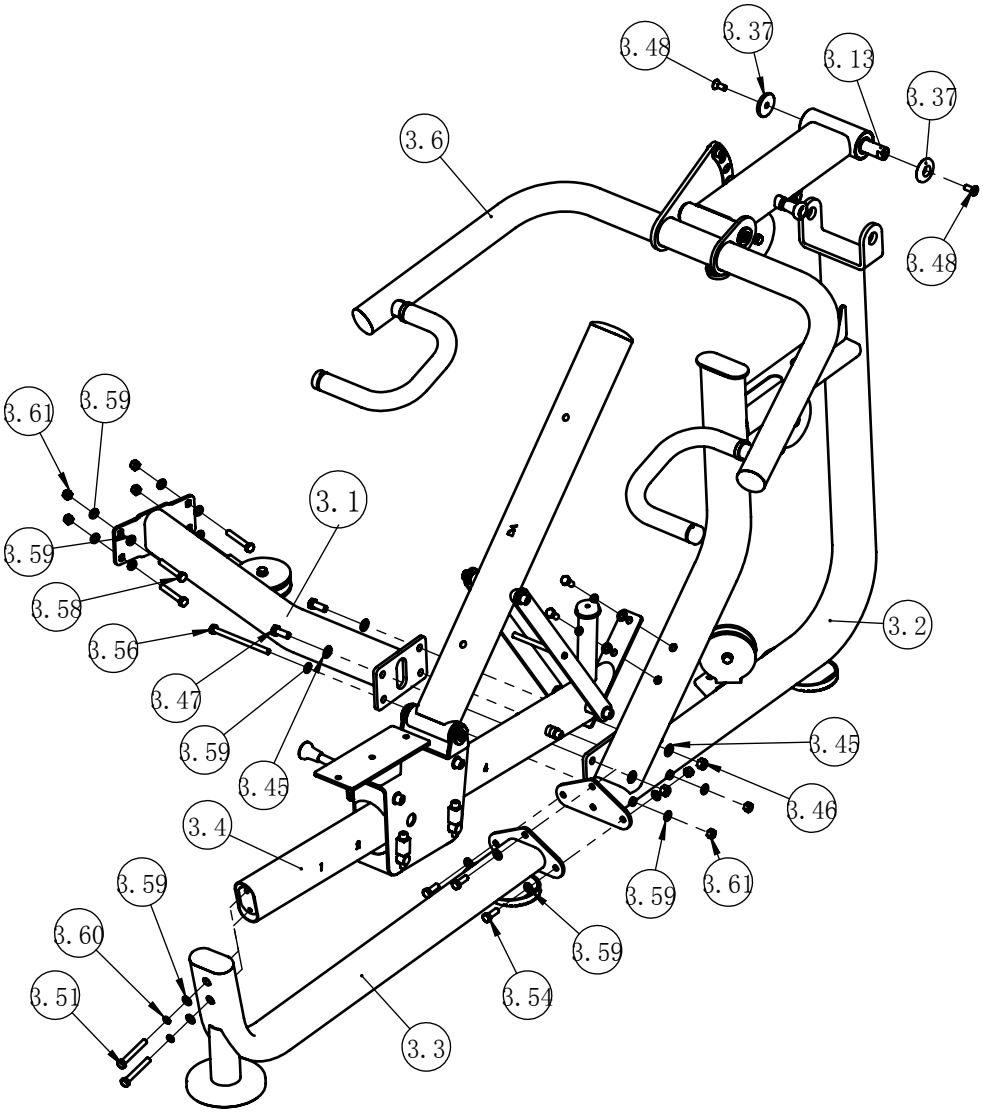

STEP 2

ITEM NO.	DESCRIPTION	QTY	ITEM NO.	DESCRIPTION	QTY
3.12	Cable 4	1	3.53	Hex Head bolt M10*45	1
3.19	Cable End	1	3.59	Washer Φ20*Φ11*2	2
3.26	4.5″ Pulley	4	3.61	Nylon lock Nut M10	1
3.42	Bushing Φ14*Φ10*20	1			

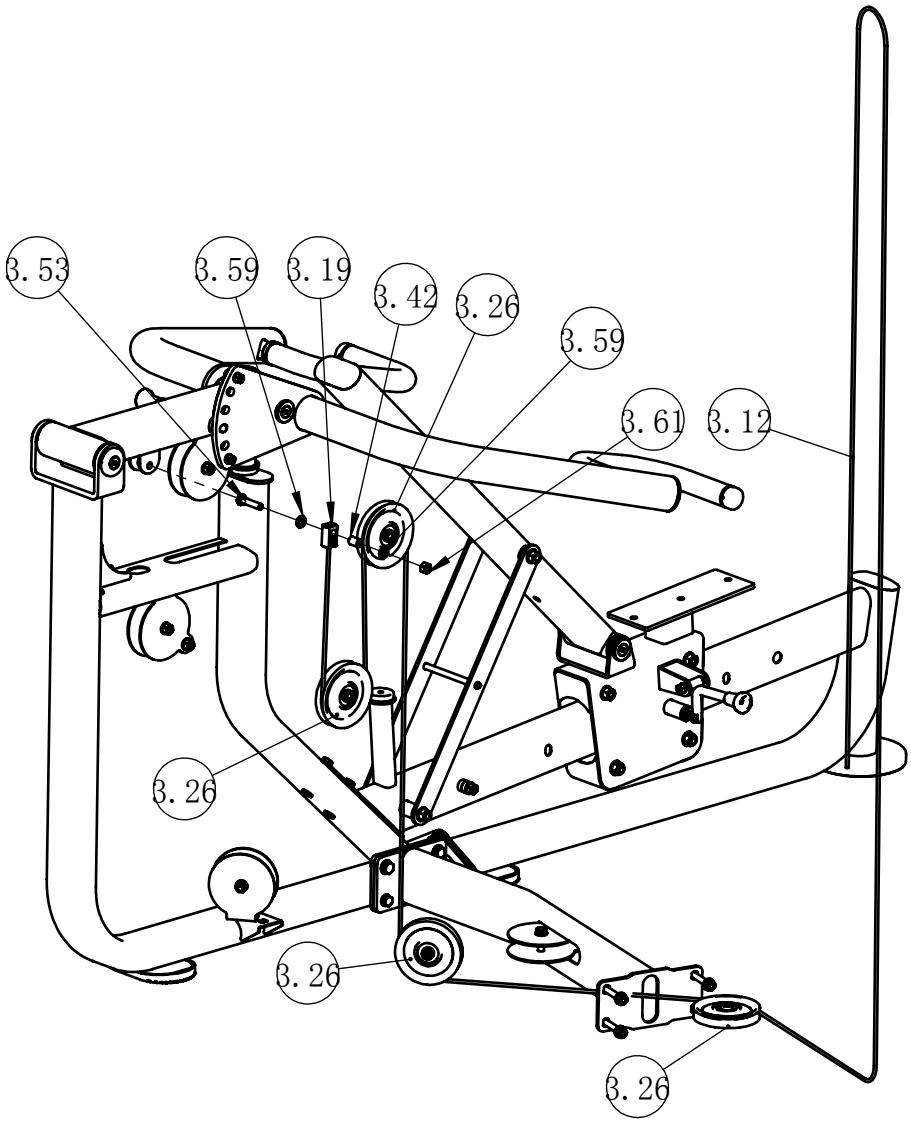

STEP 3

ITEM NO.	DESCRIPTION	QTY	ITEM NO.	DESCRIPTION	QTY
3.20	Back Pad	1	3.54	Hex Head bolt M10*30	2
3.21	Seat Pad	1	3.59	Washer Φ20*Φ11*2	4
3.51	Hex Head bolt M10*75	2			

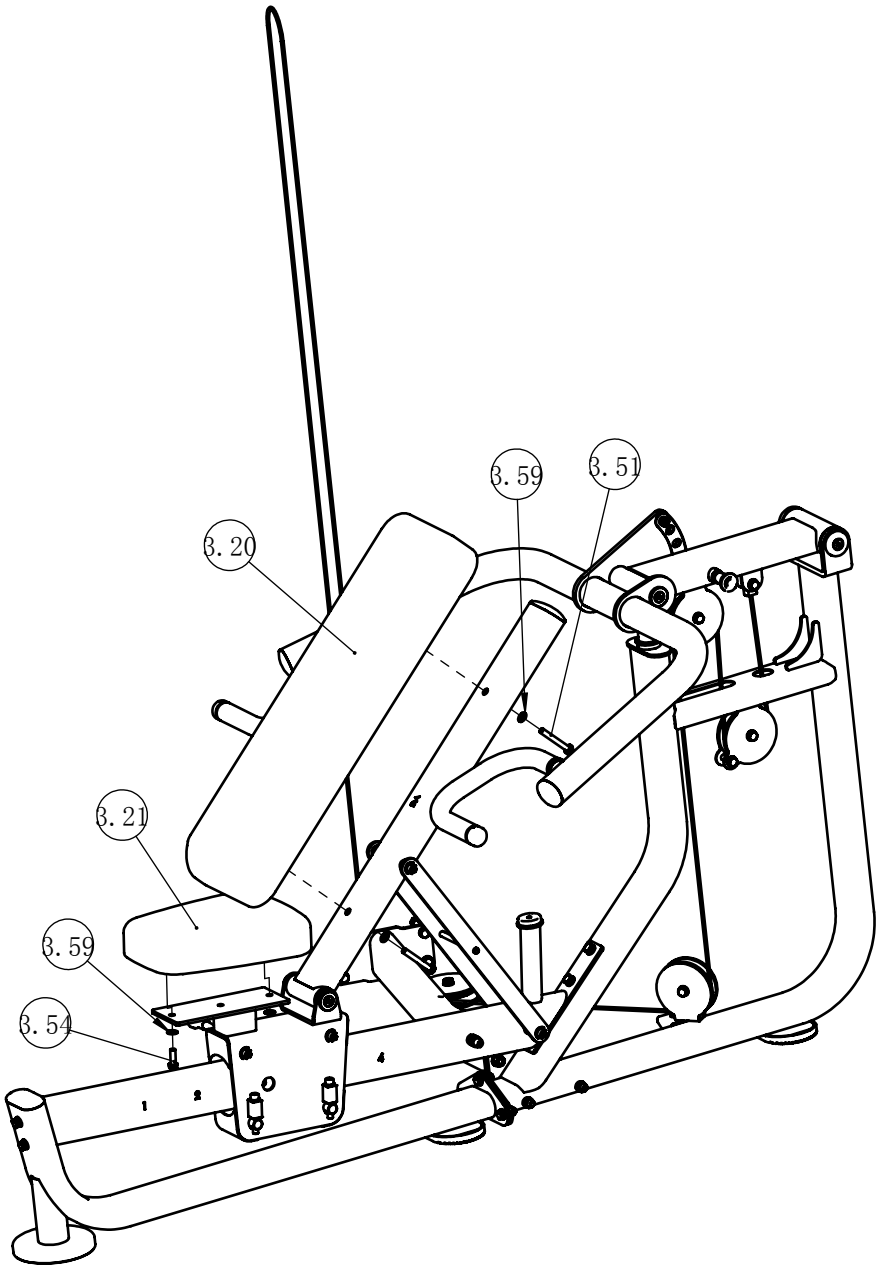

ITEM NO.	DESCRIPTION	QTY	ITEM NO.	DESCRIPTION	QTY
2.48	Hex Head bolt M10*70	4	3.58	Hex Head bolt M10*70	4
2.54	Washer Φ20*Φ11*2	8	3.59	Washer Φ20*Φ11*2	8
2.57	Nylon lock Nut M10	4	3.61	Nylon lock Nut M10	4

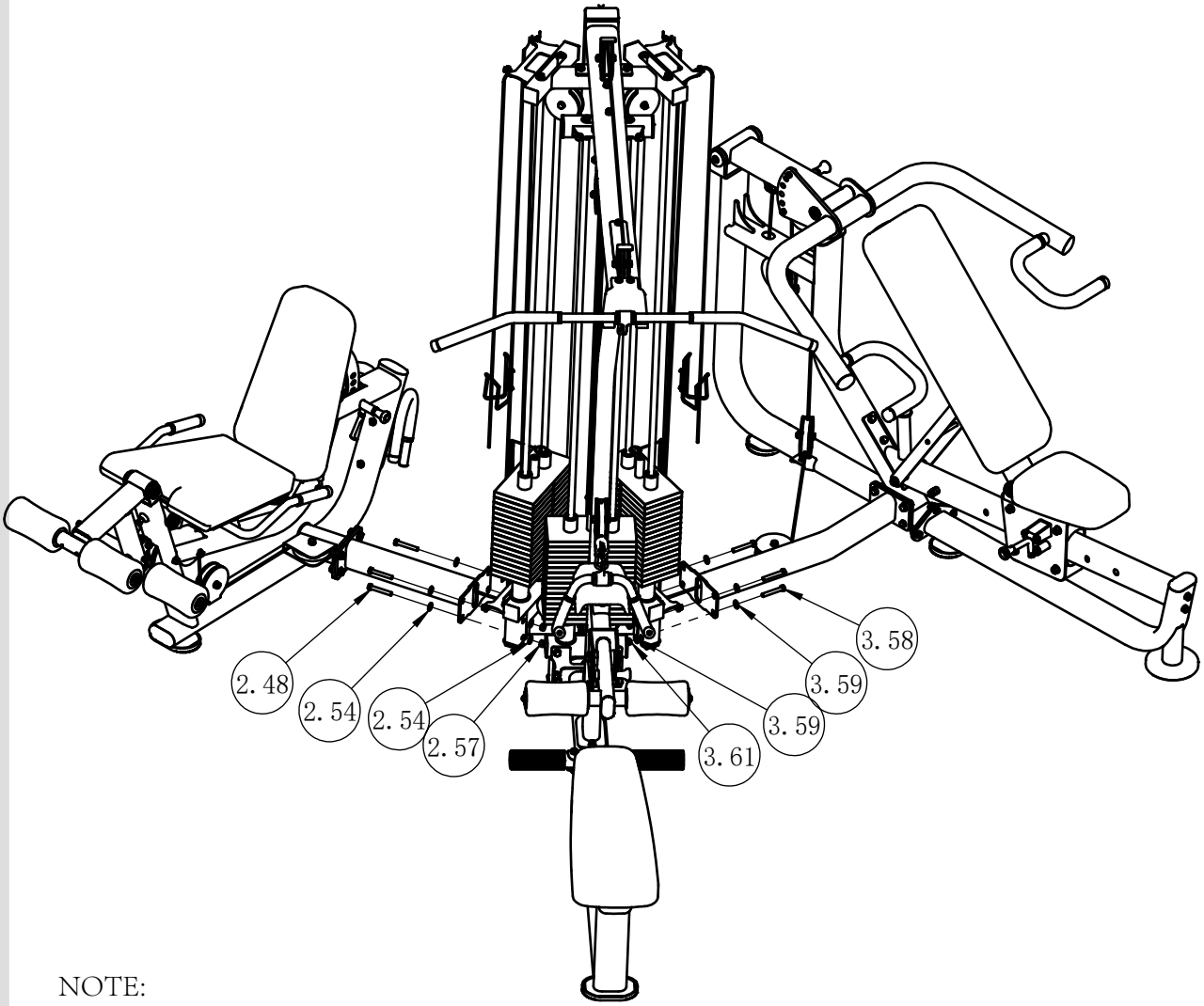

NOTE:
For the 80KG configuration, a height-increasing rack is required.

ITEM NO.	DESCRIPTION	QTY	ITEM NO.	DESCRIPTION	QTY
1.17	Iron shroud	3	1.70	Washer Φ9*Φ22*1.6	12
1.69	Hex Head bolt M8*15	12	1.72	Spring Washer Φ8	12

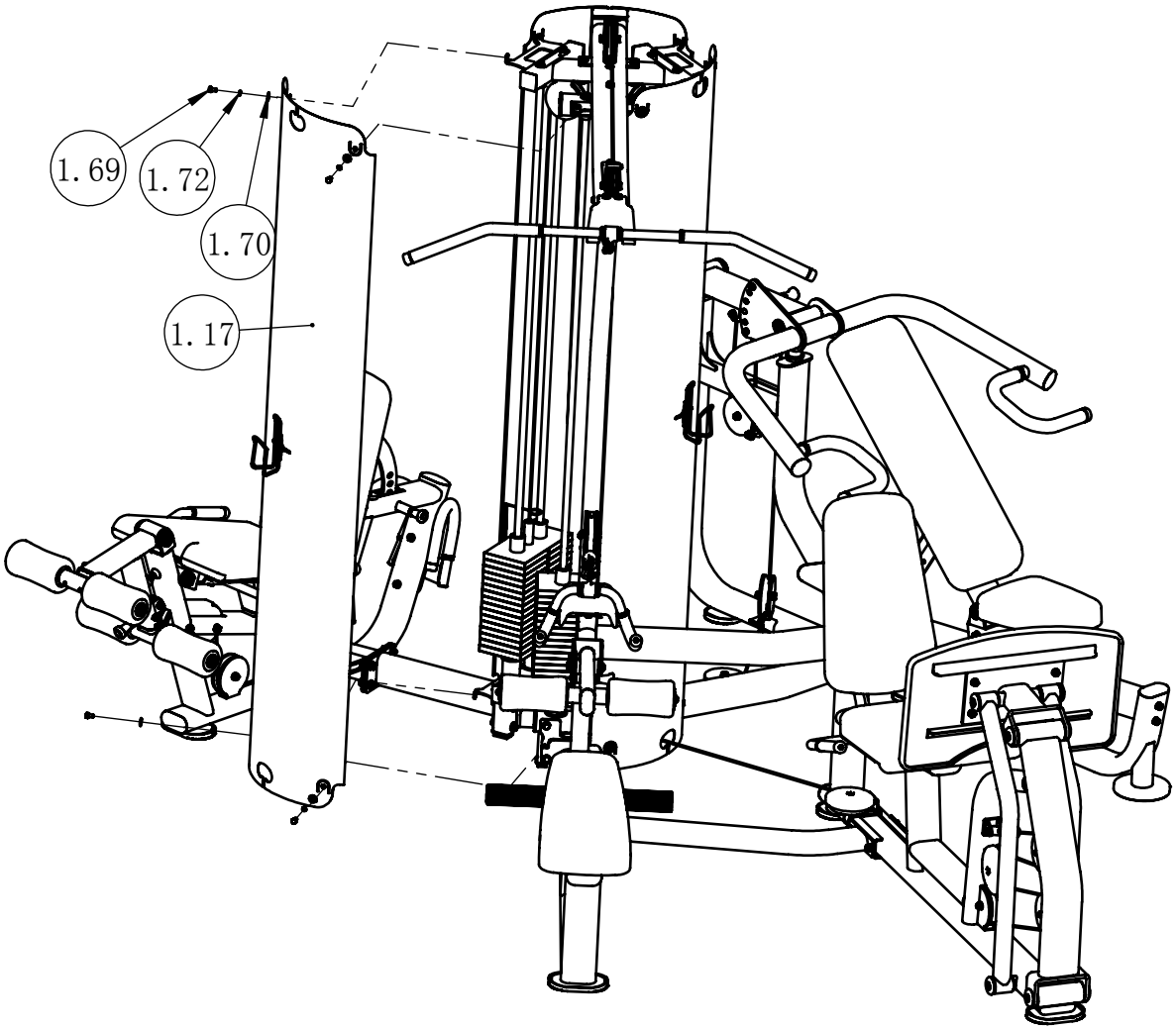

BS004 LP

Leg Press Station

OWNER'S MANUAL

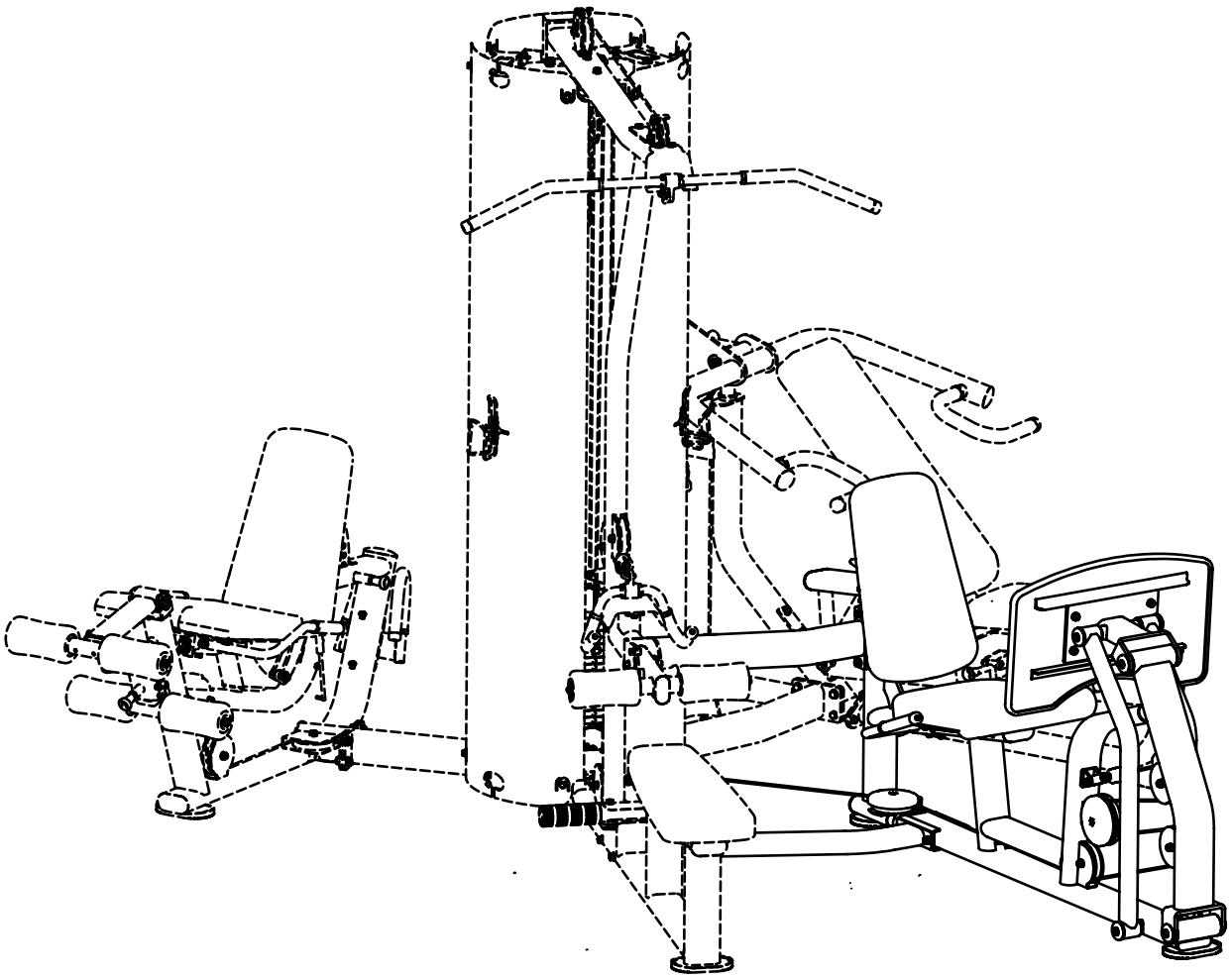

! CAUTION

Read all precautions
and instructions in this manual
before using this equipment

Important Safety Instructions

Before beginning any fitness program, you should obtain a complete physical examination from your physician. When using exercise equipment, basic precautions should always be taken, including the following:

* Read all instructions before using the equipment. These instructions are written to ensure your safety and to protect the unit.
* Do not allow children on or near the equipment.
* Use the equipment only for its intended purpose as described in this guide. Do not use accessory attachments that are not recommended by the manufacturer: such attachments might cause injuries.
* Wear proper exercise clothing and shoes for your workout----no loose clothing.
* Be careful when getting on or off the equipment.
* Do not overexert yourself or work to exhaustion.
* If you feel any pain or abnormal symptoms, stop your workout immediately and consult your physician.
* Never operate the unit when it has been dropped or damaged.
* Never drop or insert anything into any opening in the equipment.
* Always check the unit and its cables before each use. Make sure that all fasteners and cables are secure and in good working condition.
* Frayed or worn cables can be dangerous and may cause injury. Periodically check these cables for any indication of wear.
* Keep hands, limbs, loose clothing and long hair well out of the way of moving parts.
* Do not attempt to lift more weight than you can control safely.
* Do not use the equipment outdoors.

PERSONAL SAFETY DURING ASSEMBLY

* Read each step in the assembly instructions and follow the steps in sequence. Do not skip ahead. If you skip ahead, you may learn later that you have to disassemble components and that you may have damaged the equipment.
* Assemble and operate the equipment on a solid, level surface. Locate the unit a few feet from walls or furniture to provide easy access. The equipment is designed for your enjoyment. By following these precautions and using common sense, you will have many safe and pleasurable hours of healthful exercise with the equipment.

Exploded View and Parts List

ITEM NO.	DESCRIPTION	QTY	ITEM NO.	DESCRIPTION	QTY
1	Main Frame	1	31	Large Pulley Cover	3
2	Bottom Frame	1	32	Back Pad	1
3	Top Frame	1	33	Seat Pad	1
4	Front Swing Frame	1	34	Copper bearing Φ38*Φ25.4*18	8
5	Foot Frame	1	35	Flanged Shaft Bushings 1″	4
6	Foot Support Frame	1	36	Button Head Cap Screw M10*30	1
7	Joint Lever	2	37	Flat Head Cap Screw M10*75	2
8	Handle	1	38	Flat Head Cap Screw M10*30	4
9	Back Pad Frame	1	39	Flat Head Cap Screw M10*25	10
10	Adjustable Frame	1	40	Socket Head Cap Screw M10*125	2
11	Seat Pad Plate	1	41	Socket Head Cap Screw M10*50	2
12	Adjustable Tube	1	42	Hex Head bolt M10*150	2
13	Cable 5	1	43	Hex Head bolt M10*120	2
14	Cable End Shaft Φ20*77*M12	1	44	Hex Head bolt M10*75	3
15	Flange Nut M12	1	45	Hex Head bolt M10*50	4
16	Torsional spring	1	46	Hex Head bolt M10*30	6
17	Shaft Φ25.4*165	2	47	Hex Head bolt M10*25	4
18	Shoulder bolt Φ10*M8*60	1	48	Washer Φ20*Φ11*2	39
19	Cable end Shaft Φ25.4*70	1	49	Arc washers Φ10.5*Φ21*1.8	6
20	End Cap Φ50*8	8	50	Spring Washer Φ10	4
21	Elastic cylindrical pin	1	51	Nylon lock Nut M10	21
22	Aluminium Grip Ring	2	52	Button Head Cap Screw M8*45	1
23	Aluminium Grip Cap	2	53	Socket Head Cap Screw M8*30	1
24	Big Bumper	1	54	Washer Φ9*Φ16*1.6	3
25	Rubber Foot Plate	1	55	Nylon lock Nut M8	2
26	Small pulley	6	56	Button Head Cap Screw M6*12	2
27	Elliptical tube plugRT50*100	4	57	Hexagon nut M6	2
28	Plastic Tube Guide	2	58	Socket Set Screw M5*3	4
29	Grip Φ22*Φ30*205	2	59	Flat Head Cap Screw M6*16	2
30	Rubber Foot	2			

Exploded View and Parts List

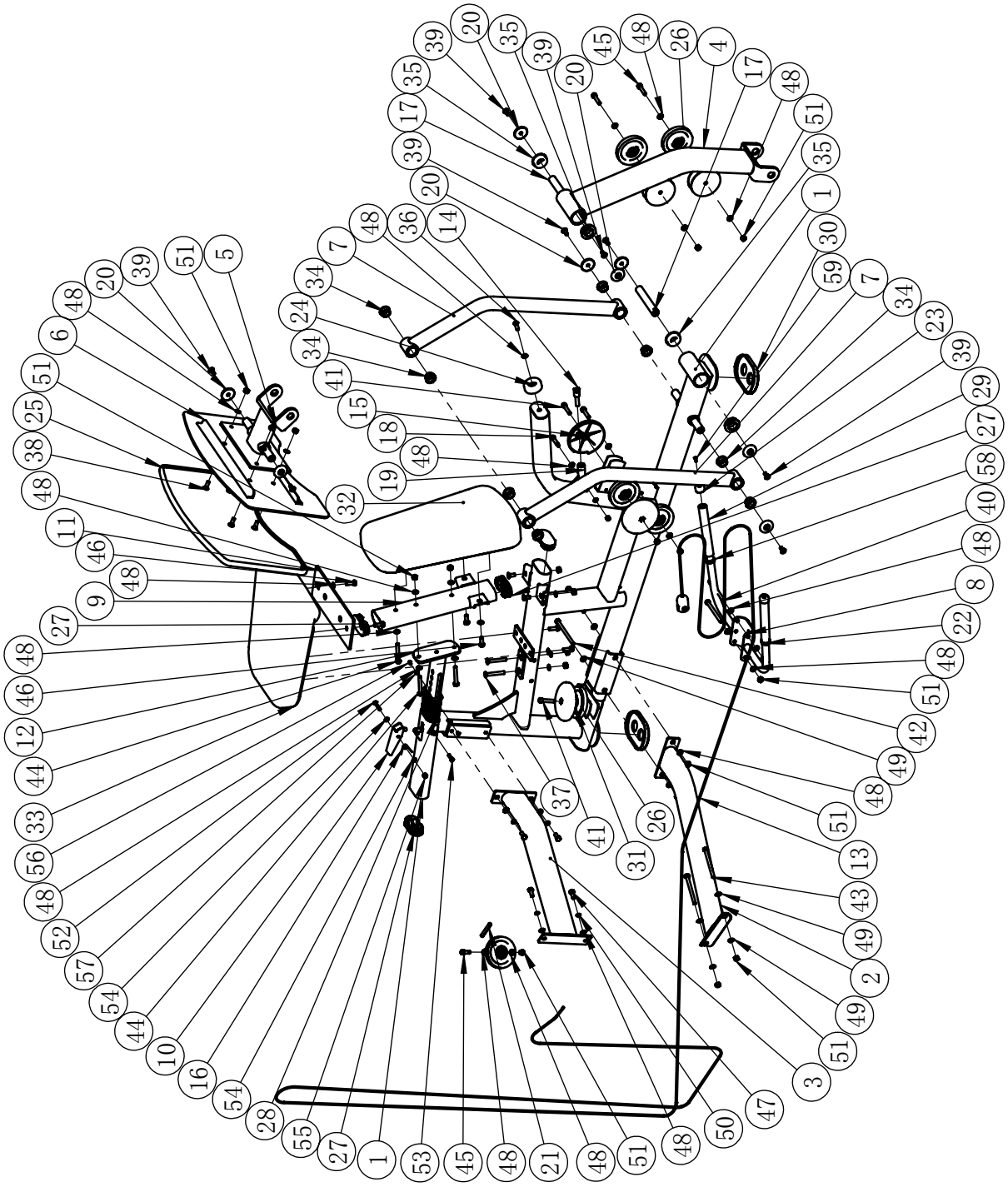

Assembly

STEP 1

ITEM NO.	DESCRIPTION	QTY	ITEM NO.	DESCRIPTION	QTY
1	Main Frame	1	39	Flat Head Cap Screw M10*25	8
2	Bottom Frame	1	42	Hex Head bolt M10*150	2
3	Top Frame	1	43	Hex Head bolt M10*120	2
4	Front Swing Frame	1	47	Hex Head bolt M10*25	4
5	Foot Frame	1	48	Washer Φ20*Φ11*2	6
7	Joint Lever	2	49	Arc washers Φ10.5*Φ21*1.8	6
17	Shaft Φ25.4*165	2	50	Spring Washer Φ10	4
20	End Cap Φ50*8	8	51	Nylon lock Nut M10	4

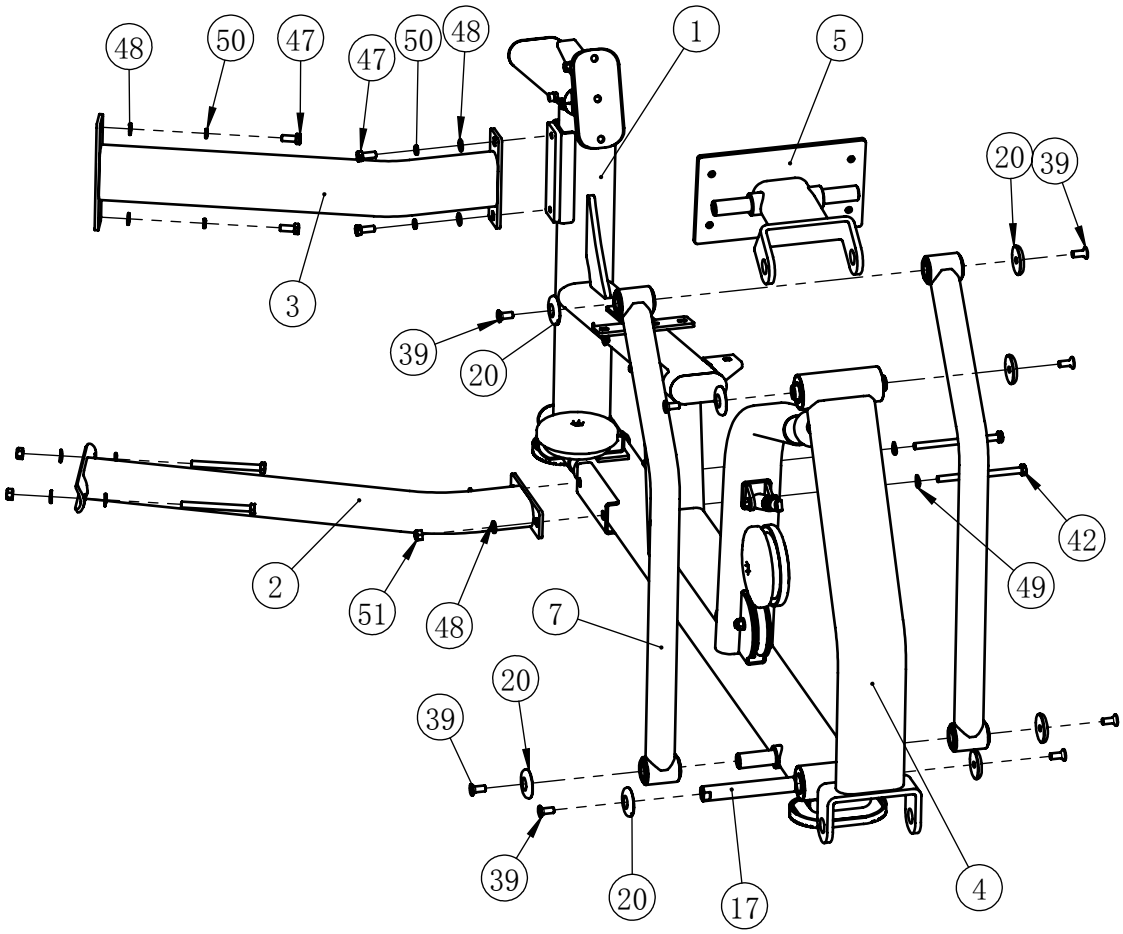

STEP 2

ITEM NO.	DESCRIPTION	QTY	ITEM NO.	DESCRIPTION	QTY
6	Foot Support Frame	1	38	Flat Head Cap Screw M10*30	4
13	Cable 5	1	39	Flat Head Cap Screw M10*25	2
14	Cable End Shaft Φ20*77*M12	1	40	Socket Head Cap Screw M10*125	2
15	Flange Nut M12	1	44	Hex Head bolt M10*75	2
18	Shoulder bolt Φ10*M8*60	1	48	Washer Φ20*Φ11*2	17
19	Cable end Shaft Φ25.4*70	1	51	Nylon lock Nut M10	12
26	Small pulley	5	54	Washer Φ9*Φ16*1.6	1
37	Flat Head Cap Screw M10*75	2	55	Nylon lock Nut M8	1

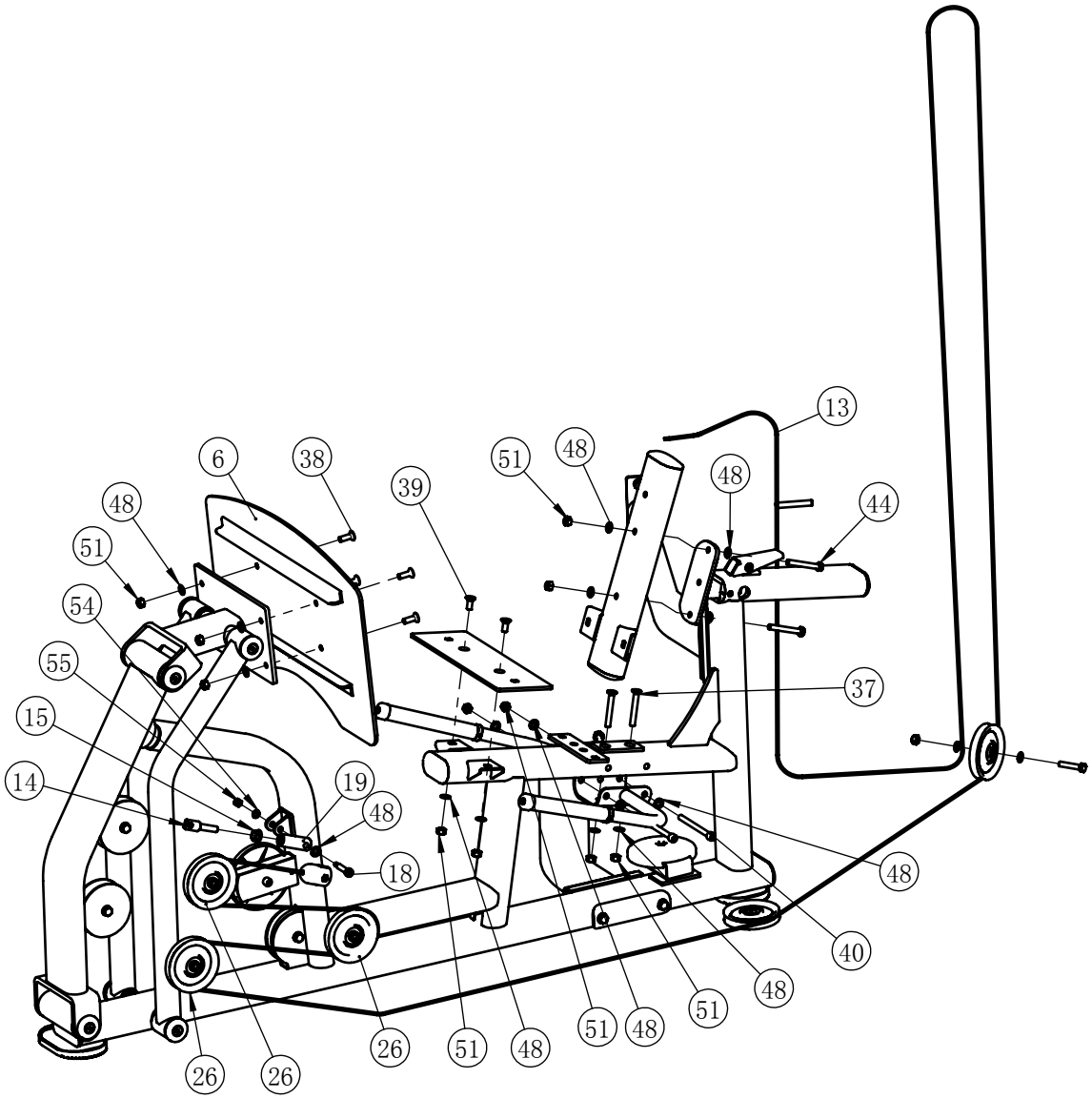

STEP 3

ITEM NO.	DESCRIPTION	QTY	ITEM NO.	DESCRIPTION	QTY
25	Rubber Foot Plate	1	44	Hex Head bolt M10*75	1
32	Back Pad	1	46	Hex Head bolt M10*30	6
33	Seat Pad	1	48	Washer Φ20*Φ11*2	7

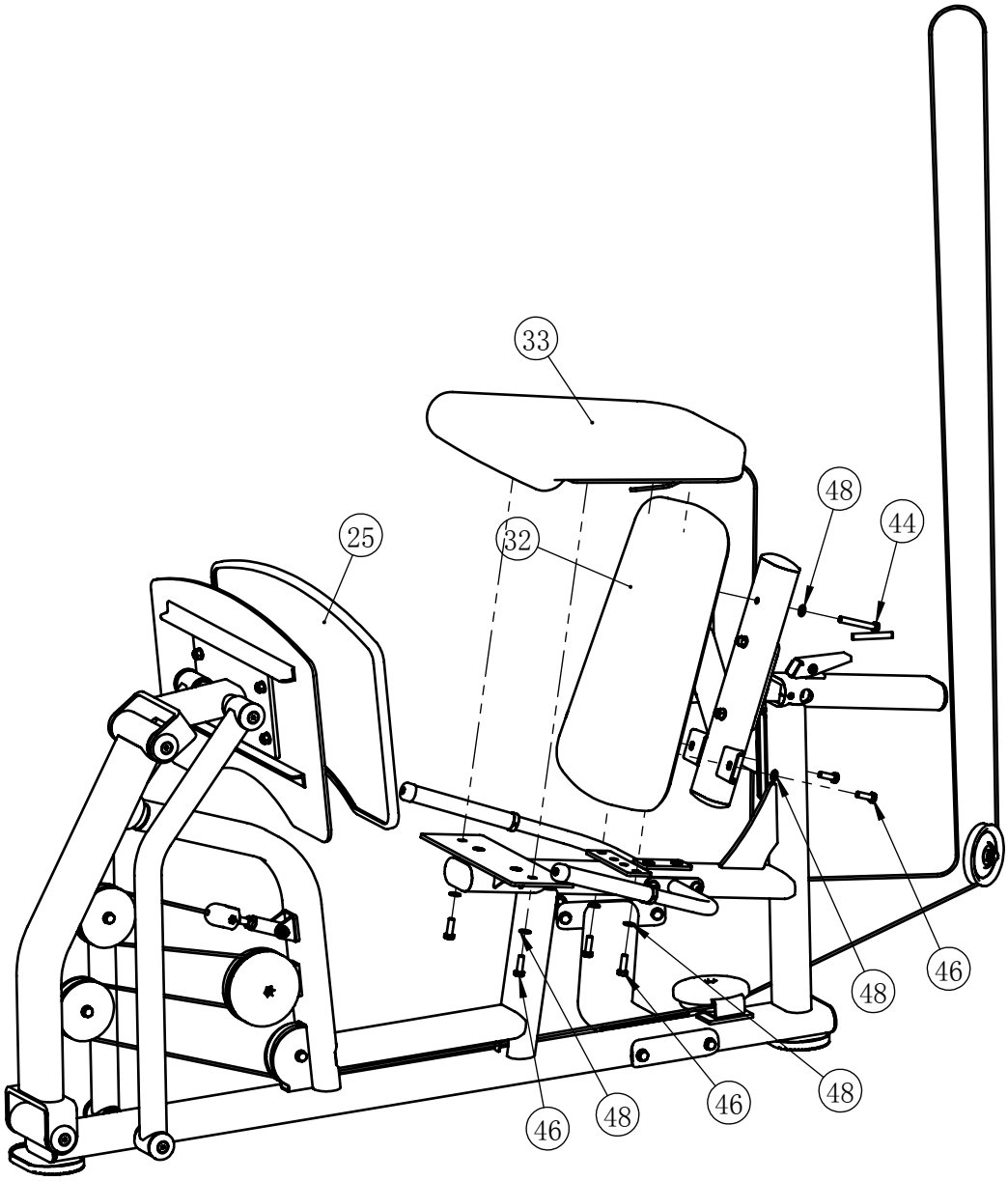

Assembly
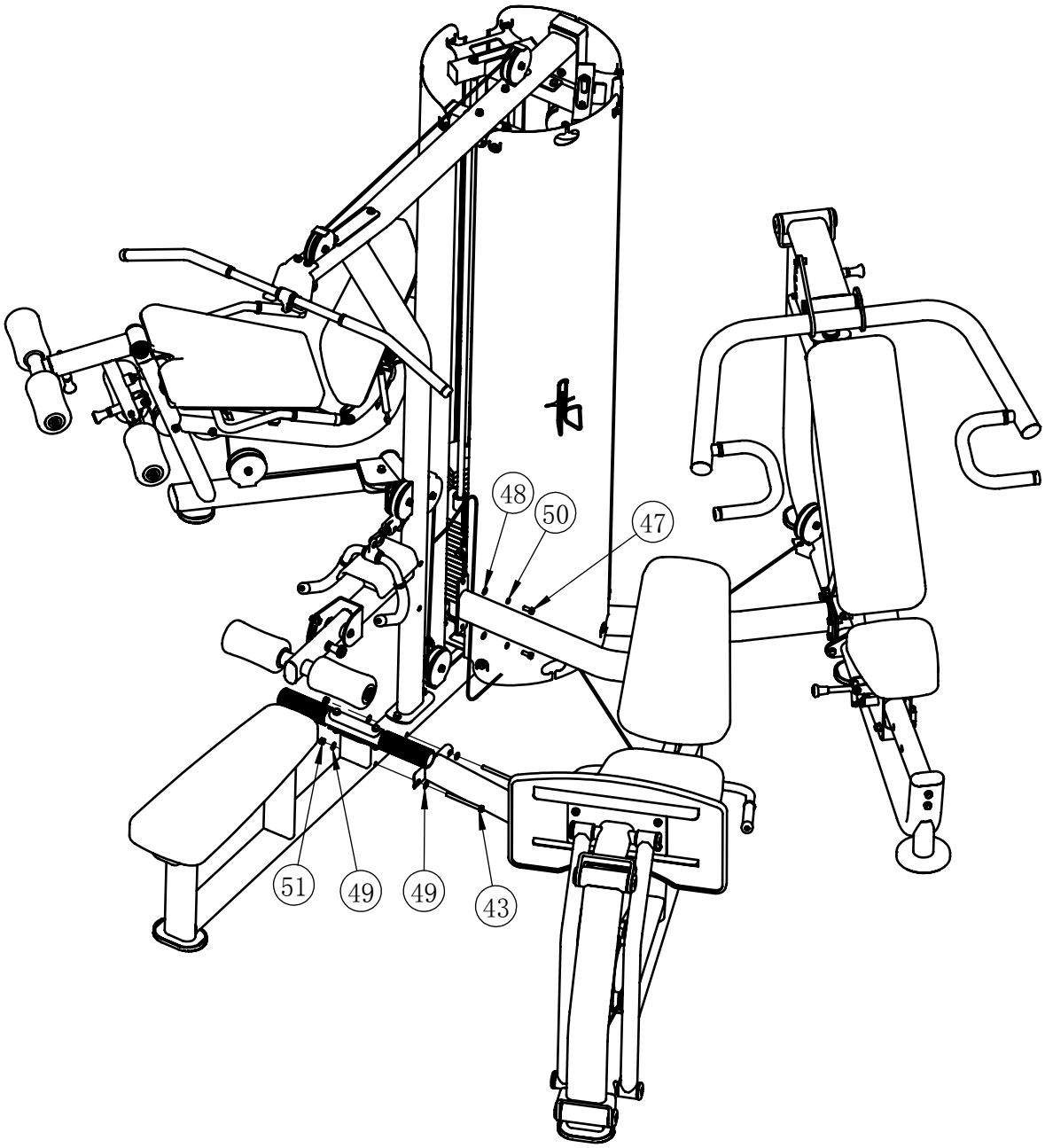
ITEM NO.	DESCRIPTION	QTY	ITEM NO.	DESCRIPTION	QTY
43	Hex Head bolt M10*120	2	49	Arc washers Φ10.5*Φ21*1.8	4
47	Hex Head bolt M10*25	2	50	Spring Washer ϕ10	2
48	Washer Φ20*Φ11*2	2	51	Nylon lock Nut M10	2